Electrolux PROFESSIONAL

ecostore Premium 2 Door Digital Refrigerator, 1430lt (-2 +10) - Remote (CO2)

ITEM #

MODEL #

NAME #

SIS #

AIA #

725238 (ESP142FRRCO2) 2-door Refrigerator 1430lt, -2+10°C, digital, AISI 304, remote, CO2 with valve

Short Form Specification

Item No.

Two full door refrigerator entirely constructed in 304 AISI stainless steel with bottom panel in anti-corrosive material. Large digital white-digit display with cabinet temperature display and setting, and possibility to select the desired levels of humidity. HACCP-compliant control with alarms and history. Frost Watch Control to defrost only when required with automatic evaporation of defrost water. Optiflow: back to front forced air flow and removable air conveyors provides even temperature distribution and fast cooling in any conditions. Fitted with 75 mm-thick cyclopentane insulating foam. Door features lock and door microswitch to switch off the fan when the door is opened. Hidden evaporator to guarantee higher storage capacity and less corrosion problems. Remote refrigeration unit; CO2 refrigerant with valve; ventilated operation; Internal LED light and internal back light.

APPROVAL:

Main Features

- Large storage area suitable to contain 2/1 GN grids or shelves on anti-tilt runners.
- Optiflow: back to front forced air flow and removable air conveyors provide even temperature distribution and fast cooling in any conditions.
- Operating temperature can be adjusted from -2 to +10 °C to suit different food storage requirements.
- Cabinet fitted with up to 75 mm thickness of cyclopentane insulation for best insulating performance with 100% environmental protection (thermal conductivity: 0,020 W/m*K).
- 60 mm-thick insulation covering the evaporator can be easily removed with a single operation.
- Two full doors.
- Performance guaranteed at ambient temperatures of +40°C (Climatic class 5).
- Prearranged to fit RS485 port to facilitate connection to a remote computer and integrated HACCP systems.
- Internal structure with 44 charging positions available to host grids, ensuring higher net capacity and a greater storage space.
- Possibility to select 3 different levels of humidity according with the type of food stored inside.
- Tropicalized unit.

ecostore Premium
2 Door Digital Refrigerator, 1430lt (-2 +10) - Remote (CO2)

Construction

- Constructed from the highest quality AISI 304 Stainless steel.
- Interior base with rounded corners, pressed from a single sheet.
- The rounded internal corners, the easily removable runners, grids and air conveyors allow for ease of cleaning and high hygiene standards.
- Stainless steel runners and supports easily disassembled.
- Anti-corrosion bottom material avoids any damage that may be caused to the cabinet by aggressive detergents employed to clean the floors.
- Easy access to the main components for maintenance.
- Lockable door.
- Remote refrigeration unit.
- Solenoid valve included.
- Mounted on adjustable Stainless steel feet, with castors as an option.

User Interface & Data Management

- Integrated RS485 port to facilitate connection to a remote computer and integrated HACCP systems.
- Large digital white-digit display with cabinet temperature display and setting, activation of turbo frost cycle (to rapidly cool warm loads) and possibility to activate manually the defrost cycle.
- Large digital white-digit display with cabinet temperature display and setting, and possibility to select the desired levels of humidity. Bluetooth technology included allows to keep HACCP historical data and download them through the app.
- Electrolux Professional Fridge Control APP makes the life easier for our customers:
  - Monitor safety of preservation process thanks to HACCP data & alarms for precise control
  - Save time and easy data management having the possibility to send the HACCP information in excel format directly to e-mail address
  - Quick operations: set the cabinet temperature/humidity/ turbocooling and set date/hour

Sustainability

- Frost Watch Control: fully automatic defrost starts only when ice is actually building-up in the evaporator and adapt the defrosting duration to guarantee perfect ice removal while optimizing energy efficiency consumption.
- Improved defrost and evaporator fan management – defrost type changes with temperature set-point: electric below +2°C while air convection defrost above +2°C, thus saving energy.
- Removable triple-chamber balloon magnetic gasket to improve insulation and reduce energy consumption and ease of cleaning.
- Interior LED light to save energy and for best internal visibility.
- CFC and HCFC-free insulation.
- Door switch stops the fan when door is opened to avoid cold air exiting the cell, thus saving energy.
- Automatic evaporation of the defrosting water by hot gas on the top for energy saving.
- Cleaning-free condenser: the structure of the wire frame condenser prevents dust and grease accumulation thus avoiding periodical cleaning operations and reducing energy consumption.
- Cabinet certified as Class A in heavy duty working conditions (40°C-40% humidity) based on European Ecodesign directive.
- The label complies with the delegated regulation (UE) 2015/1094 of the commission of 5th may 2015.
- CO_2 (R744) is the refrigerant choice that's safe for the environment and delivers outstanding performance.
  Eco-Friendly: Zero Ozone Depletion Potential and an ultra-low Global Warming Potential (GWP = 1).
  Safe to Use: Non-toxic and non-flammable for peace of mind.
  Sustainable: A natural refrigerant that supports a greener, cleaner planet.

Included Accessories

8 of 2/1GN grey rilsan grid with 2 runners	PNC 881020	

Optional Accessories

2 stainless steel runners for refrigerated cabinets - (Marine)	PNC 880242	❑
Set of 8 GN1/1 PVC containers for fish	PNC 880243	❑
Spacer for 670 lt and 1430 lt refrigerated cabinets	PNC 880248	❑
Kit 20 pair runners and tray supports to fit pastry trays (400x600mm)	PNC 880333	❑
1/1GN plastic container with false bottom	PNC 880705	❑
2/1GN grey rilsan grid	PNC 881004	❑
2/1GN aisi 304 stainless steel grid	PNC 881016	❑
2/1GN 304 AISI stainless steel grid with 2 runners	PNC 881018	❑
Meat rail for 670/1430lt refrigerators with 4 hooks	PNC 881019	❑
2/1GN grey rilsan grid with 2 runners	PNC 881020	❑
Set of 2 stainless steel runners for 670/1430lt refrigerators and freezers	PNC 881021	❑
Pedal opening for 1430lt refrigerator	PNC 881033	❑
2/1GN pvc container with lid and 2 runners	PNC 881039	❑
2/1GN perforated shelf	PNC 881042	❑
1/1GN rilsan steel wire basket h=150mm	PNC 881043	❑
3 grey rilsan central grids for 1430lt (not for glass door)	PNC 881044	❑
2/1GN grey rilsan basket+2 runners h=150mm	PNC 881047	❑
5 swivelling wheels (2 with brake), diam 125mm, for 1430 lt refrigerators, NOT for remote models	PNC 881294	❑
IoT module for refrigerated cabinets and counters	PNC 881298	❑

The company reserves the right to make modifications to the products without prior notice. All information correct at time of printing.

2026.03.09

ecostore Premium
2 Door Digital Refrigerator, 1430lt (-2 +10) - Remote (CO2)

Front

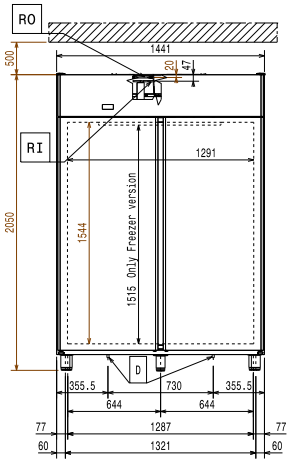

Side

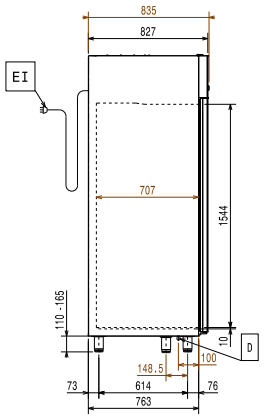

EI = Electrical inlet (power)
RI = Refrigerant Inlet
RO = Refrigerant Outlet

Top

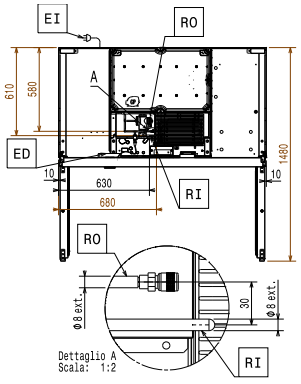

Electric

Supply voltage:	220-240 V/1 ph/50/60 Hz
Electrical power, max:	0.16 kW

Capacity:

Number and type of grids (included):	8 - GN 2/1

Key Information:

Door hinges:	
External dimensions, Width:	1441 mm
External dimensions, Depth:	835 mm
External dimensions, Depth with Doors Open:	1480 mm
External dimensions, Height:	2050 mm
Number and type of doors:	2 Full
Type of external material:	304 AISI
Type of internal material:	304 AISI
Internal panels material:	304 AISI
Number of positions & pitch:	44; 30 mm
Gross capacity:	1430 lt

Refrigeration Data

Control type:	Digital
Refrigeration type:	R744
Suggested refrigeration power:	458 W
Condition at evaporation temperature:	-10 °C
Condition at condensation temperature:	55 °C
Condition at ambient temperature:	43 °C
Connection pipes (remote) - outlet:	9.5 mm
Connection pipes (remote) - inlet:	6 mm
***Note:**	Ref. Power calculated at a linear distance of 15 mt (piping)

ISO Certificates

ISO Standards:	ISO 9001; ISO 14001; ISO 45001; ISO 50001

The company reserves the right to make modifications to the products without prior notice. All information correct at time of printing.